Anti-Ligature Double

Stainless steel wudu unit

Product code: WW-ALS-2 (with seat) | WW-ALNS-2 (no seat)

Product description

A two-user stainless steel ablution unit with an anti-ligature design for custodial and controlled-access settings. Available with or without seating to suit the project specification.

Key features

- Anti-ligature push-button, timed-flow tap
- Tamper-resistant features and secure edge finishing
- Access panel for pipework maintenance
- Smooth, corrosion-resistant surface

Technical specification

Material	Grade 304 stainless steel; 1.2 mm and 2 mm
Finish	Brushed stainless steel
Overall size (W x D x H)	1200 x 865 x 700 mm (seated)
Stool dimensions	300 x 300 mm seat; 550 mm high
Waste outlet	45 mm diameter
Mounting	Floor mounted; bolt-on stool option

Installation & specification notes

Specify the seated or unseated version when ordering. Confirm the required fixing arrangement and suitability for the intended secure environment with the project team.

The information in this specification sheet reflects the current technical specifications at the time of print. We reserve the right to change the technical or physical specifications without prior notice. All WuduWash images and symbols are exclusive property of WuduWash Limited. WuduWash Limited accept no liability for loss or damage caused by improper installation. Any reproduction or retransmission or republication of any part of this specification sheet is strictly prohibited, unless prior written permission has been granted by WuduWash Limited.

Anti-Ligature Double

Stainless steel wudu unit

Product code: WW-ALS-2 (with seat) | WW-ALNS-2 (no seat)

Dimensions & fixing details

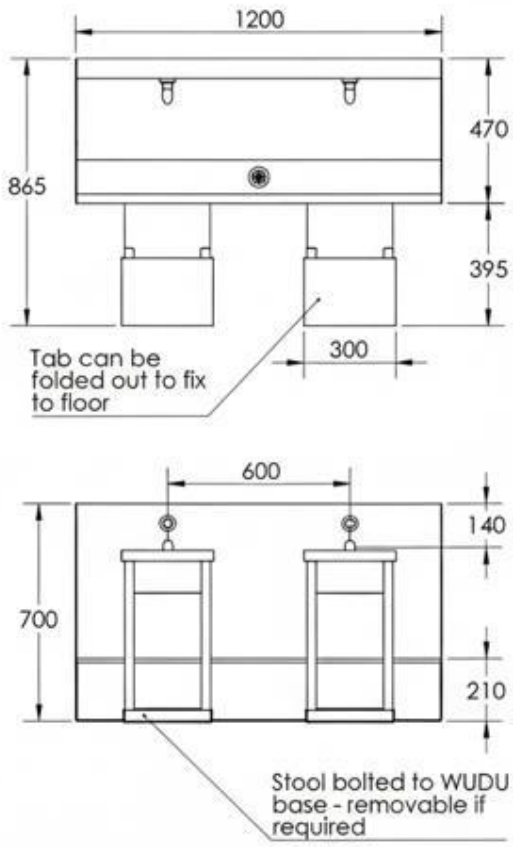

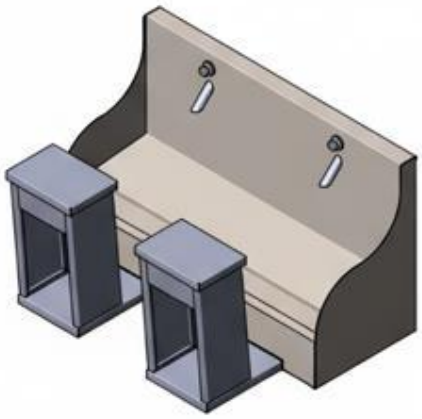

Drawing notes

Dimensions are in millimetres. Overall height 700 mm, as shown on the supplied drawing. Not to scale.

The information in this specification sheet reflects the current technical specifications at the time of print. We reserve the right to change the technical or physical specifications without prior notice. All WuduWash images and symbols are exclusive property of WuduWash Limited. WuduWash Limited accept no liability for loss or damage caused by improper installation. Any reproduction or retransmission or republication of any part of this specification sheet is strictly prohibited, unless prior written permission has been granted by WuduWash Limited.